FROM CONCEPT TO USER

LRPT109

Rocksliders

Land Rover

Technical Data

Material	Steel S275JR EN10025-2
Thickness	3 ; 5 mm
Finish	Textured Black Powder Coating

Vehicle Compatability

Land Rover Defender 90

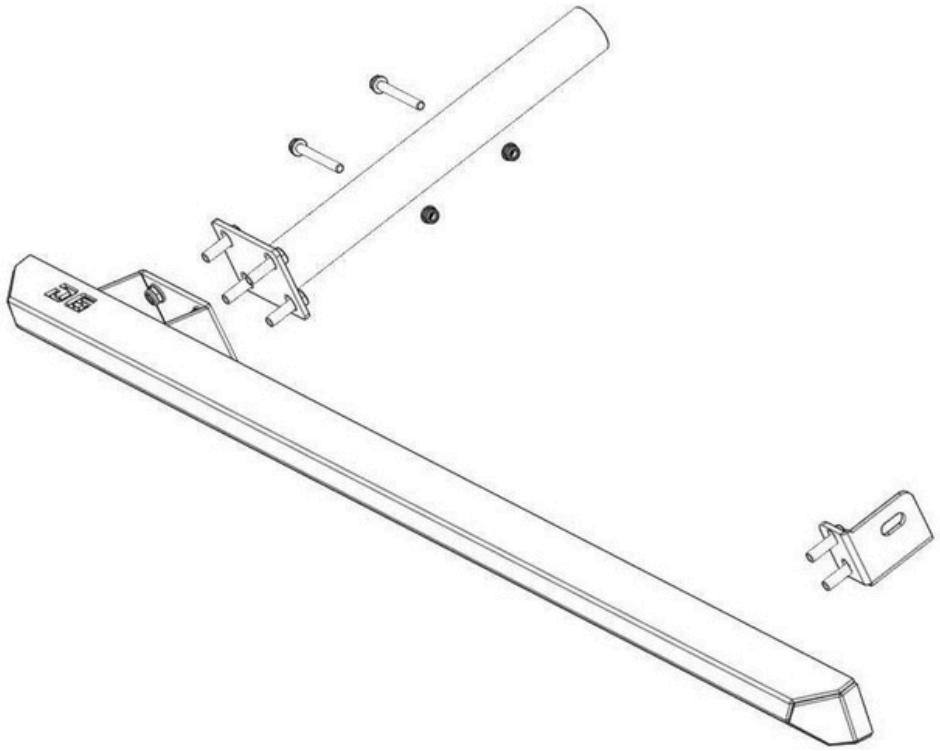

Concept D6 Unipessoal, Lda I Zona Ind. Rio Meão I street 8 I nº 310 I 4520-475 Rio Meão
www.D6-4x4.com I facebook.com/d6.4x4 I instagram.com/D6_4x4

Checklist:

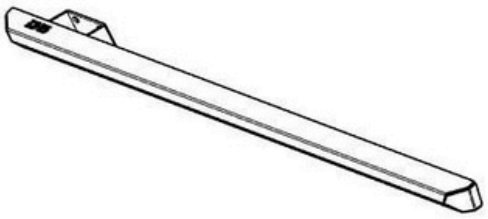

Rockslider

☐ 2x

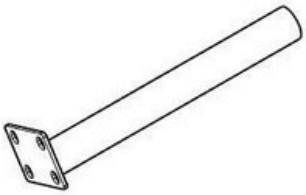

Bracket 1

☐ 2x

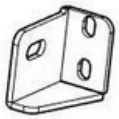

Bracket 2

☐ 2x



M10x30/35

☐ 12x



M10

☐ 20x



M10

☐ 8x

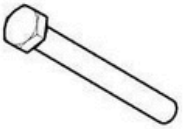

M8x70

☐ 2x



M8

☐ 4x



M8

☐ 2x

Tools required:



⬡ 13, 17

Fitting instructions:

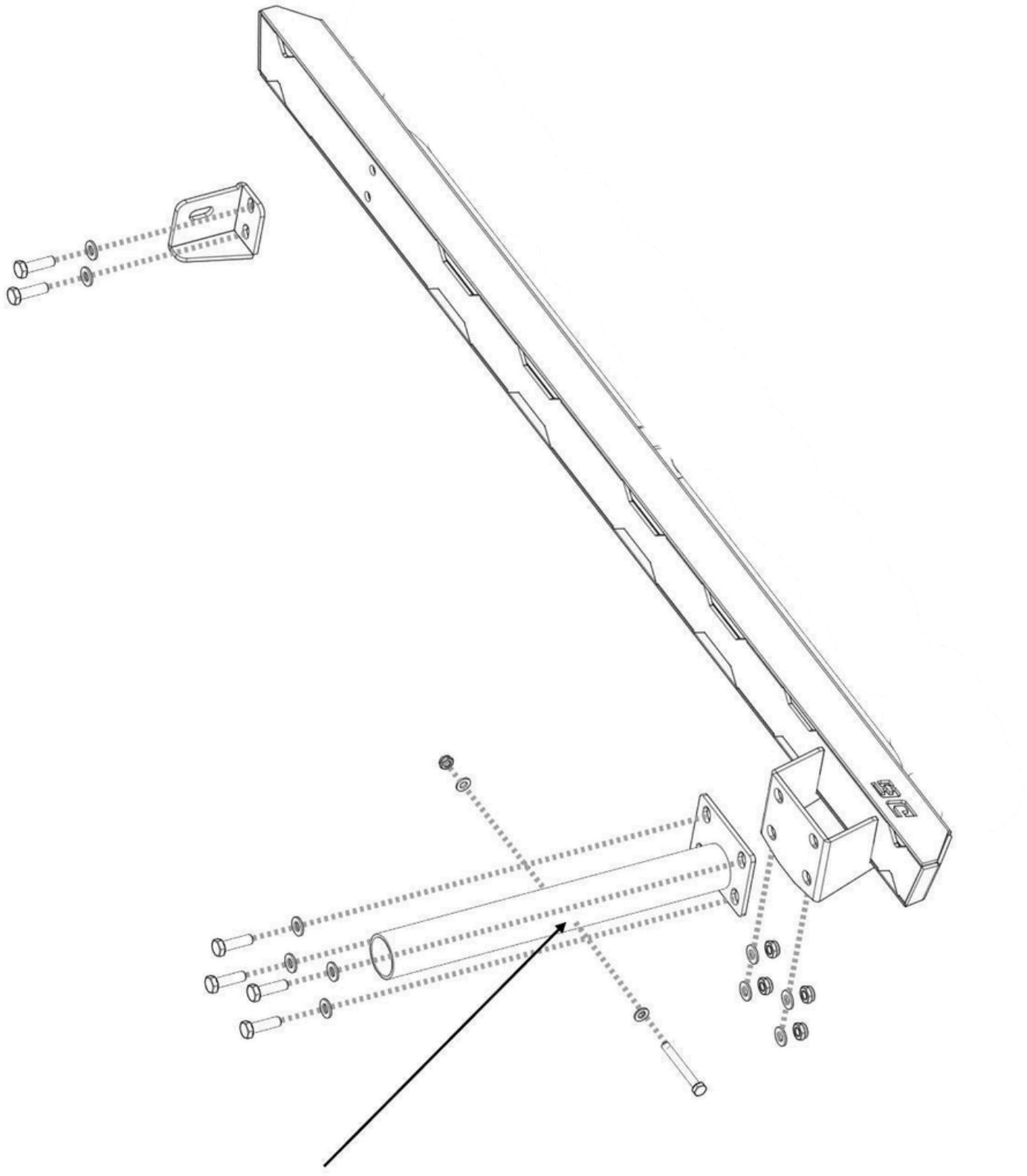

Drill a hole in bracket, if necessary, to strengthen the structure